OUTFALL CONTROL STRUCTURE TABLE

STRUCTURE NUMBER	A (in.)	B (in.)	C (in.)	D (ft.)	E (ft.)	F (ft.)	BLEED DOWN COUNT	BLEED DOWN GEOMETRY
1	3.0	18.0	3.0	72.60	73.09	74.70	2	CIRCULAR
2	6.0	15.0	4.0	72.50	72.85	74.30	1	RECTANGULAR
3	10.0	30.0	2.5	72.40	72.60	73.70	1	RECTANGULAR
4	3.0	5.0	3.0	73.40	73.95	76.05	2	CIRCULAR
5	3.0	8.0	3.0	75.40	75.72	77.50	3	CIRCULAR
6	3.0	6.0	3.0	75.10	75.76	78.20	2	CIRCULAR
7	3.0	6.0	3.0	76.50	76.87	78.80	2	CIRCULAR
8	6.0	6.0	4.0	76.25	76.60	78.50	1	RECTANGULAR
9	3.0	6.0	3.0	74.40	74.82	77.30	2	CIRCULAR

① 3/16" THICK STAINLESS STEEL OR 1/4" THICK ALUMINUM FABRICATED SKIMMER PLATE WITH OPEN TOP AND BOTTOM.

② 3/8" DIAMETER STAINLESS STEEL EXPANSION ANCHORS. 3" LONG MIN. W/STAINLESS STEEL WASHERS & NUTS. IF HEIGHT OF SKIMMER IS 12" OR LESS 2 EACH SIDE REQUIRED. IF SKIMMER IS OVER 12" IN HEIGHT, SPACE BOLTS ONE FOR EACH 6" C.C. MAX. SPACING EACH SIDE OF SKIMMER.

③ A 3"x3"x3"x3/8" COATED GALVANIZED TEE BAR SHALL BE FASTENED TO SKIMMER FOR PLATE STIFFENER. TEE BAR SHALL BE TACK WELDED HAVING EACH TACK NOT TO EXCEED 6" APART ALONG BOTH EDGES OF THE STRIP. PROVIDE 2"x2"x1/4" L BRACE AT 4' O.C.

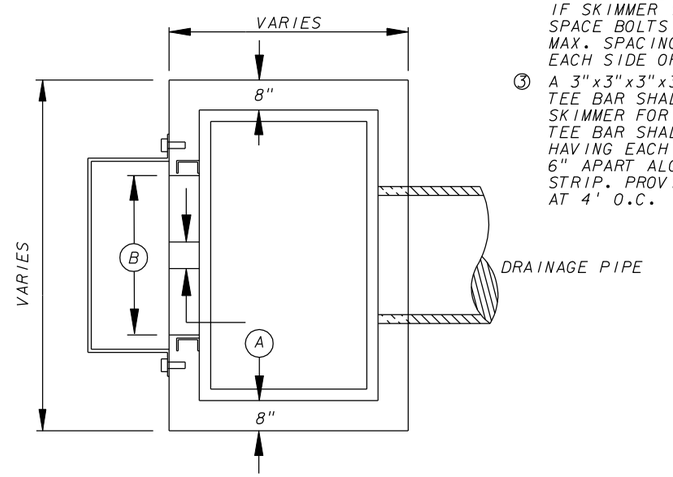

PLAN VIEW

NOTES:
1. ALL CONCRETE SHALL BE 3,000 PSI @ 28 DAYS.
2. 3/4" CHAMFER ALL EXPOSED EDGES.
3. STEEL REINFORCEMENT SHALL MEET WITH A.S.T.M. SPEC. (A-615)4, DEFORMED BARS.
4. STRUCTURES MAY BE PRECAST AT CONTRACTOR'S OPTION.
5. TYPE "D" STRUCTURES SHALL USE STANDARD F.D.O.T. STEEL GRATES.

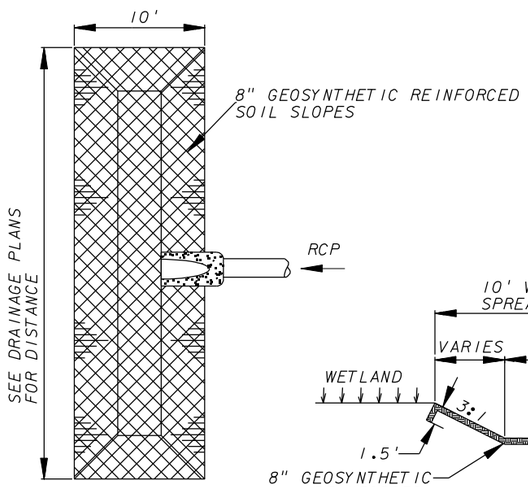

PLAN VIEW

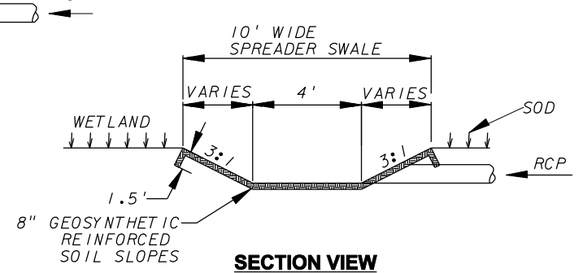

SECTION VIEW

SPREADER SWALE DETAIL
N.T.S.

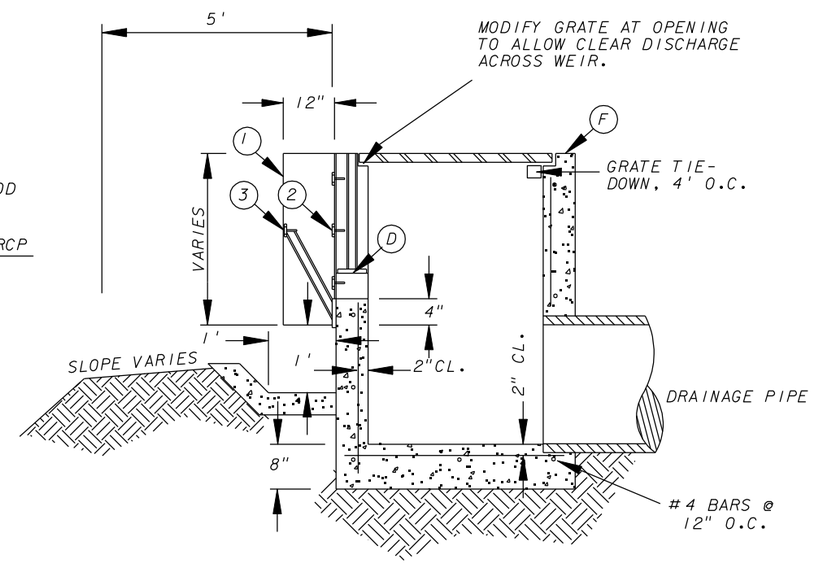

SECTION

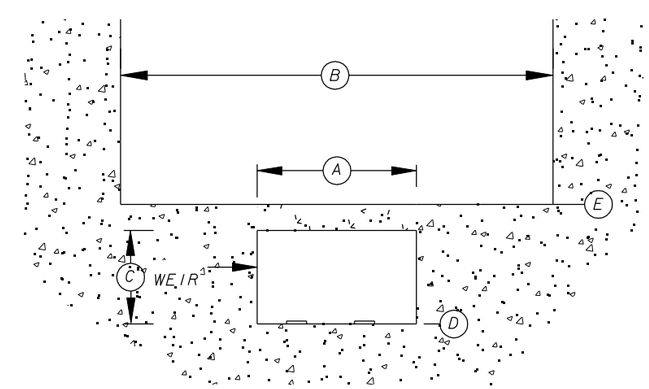

WEIR CUT-OUT

OUTFALL CONTROL STRUCTURE
(FDOT TYPE "C" INLET INDEX NO. 232)
N.T.S.

REVISIONS					
DATE	BY	DESCRIPTION	DATE	BY	DESCRIPTION

Stantec
Stantec Consulting Services Inc.
4305 NEPTUNE ROAD
ST. CLOUD, FLORIDA
34769
TEL. 407.892.3214
FAX. 407.892.4648
WWW.STANTEC.COM

CITY OF ST CLOUD

ROAD NO.	COUNTY	PROJECT ID
	OSCEOLA	- - -

OUTFALL CONTROL STRUCTURE DETAILS NOLTE ROAD

SHEET NO. B-77